OPKON
Sense the motion

MST

Non-Contact Magnetostrictive Position Sensor In Cylinder Applications

ANALOG mA / V

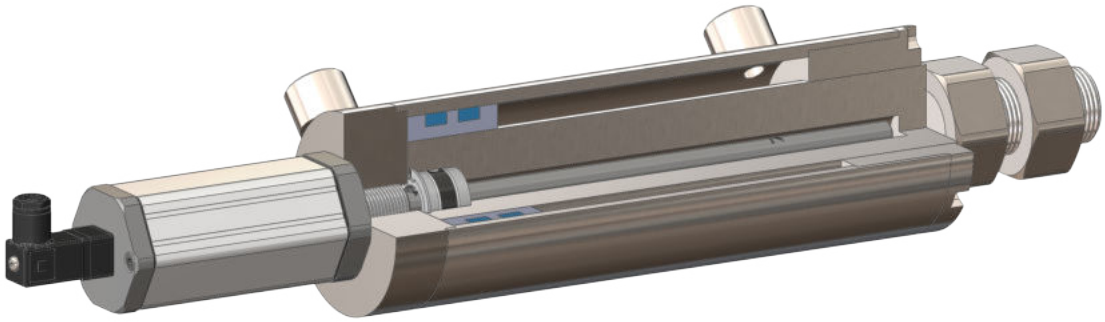

1.PRODUCT DESCRIPTION AND TECHNOLOGY

1.1 Non-Contact Magnetostrictive Position Sensor In Cylinder Applications

Contactless magnetostrictive position sensors inside the piston are designed to measure the position of hydraulic pistons precisely and reliably. These sensors are resistant to high pressure, can operate in hydraulic oil, have high accuracy, and an unlimited mechanical lifespan, providing absolute position measurement.

1.2 Measurement Principle

The working principle of magnetostrictive position sensors involves an electronic circuit sending an initial pulse to the magnetostrictive measurement wire. This electric pulse creates an electromagnetic wave traveling along the magnetostrictive wire. A magnet, which moves based on the changing mechanical position outside the sensor, generates a stop signal at the point where it meets the electromagnetic wave. The duratio between the initial pulse signal and the stop signal contains the position information of the sensor.

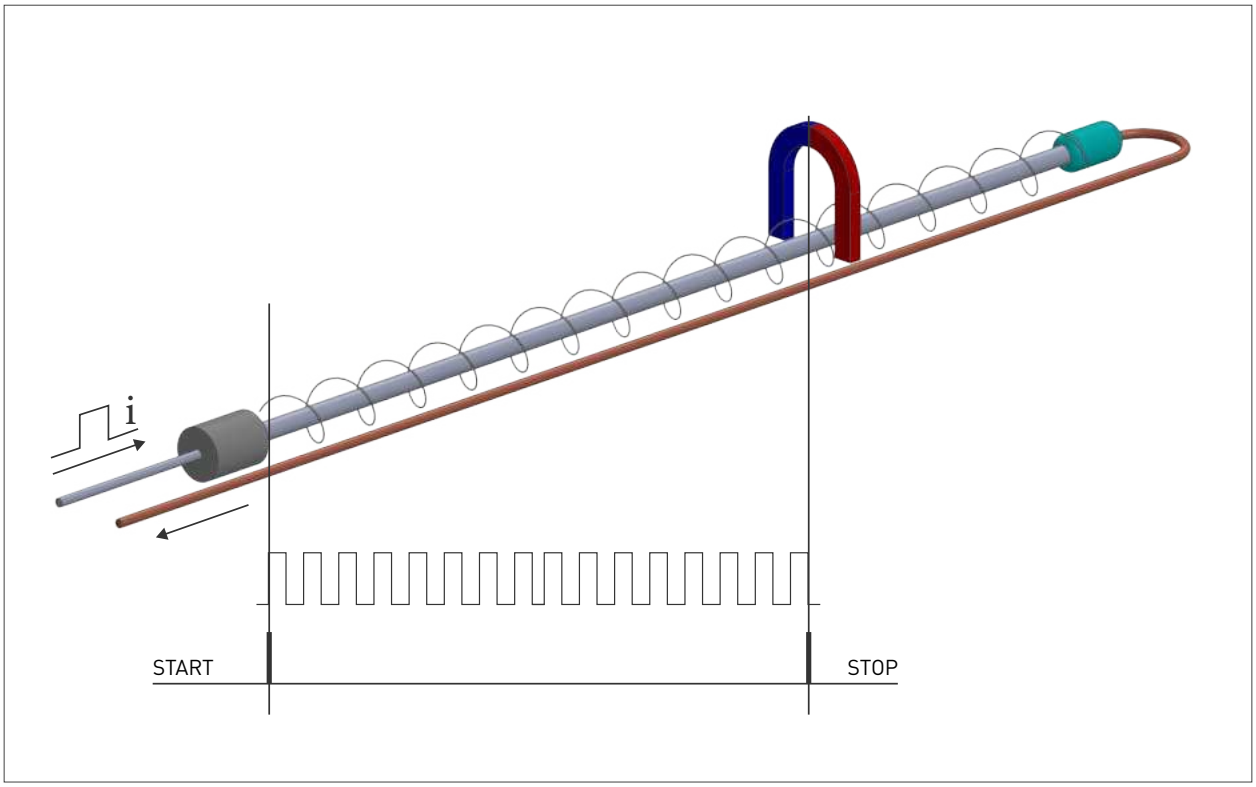

1.3 Mechanical Installation

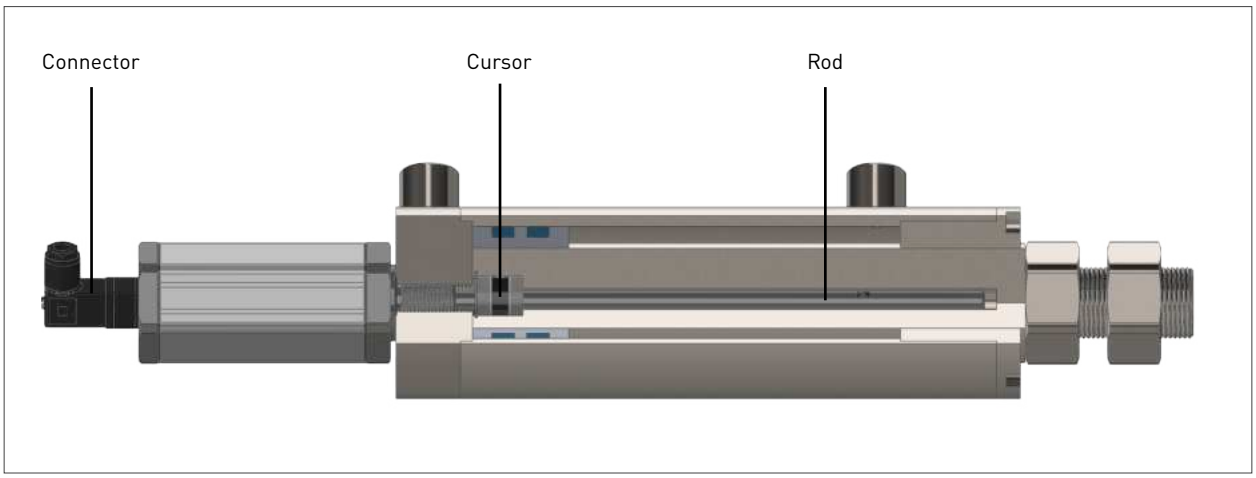

2.TECHNICAL SPECIFICATIONS

Measurement stroke	50 - 5.000 mm
Pressure rating	<500 bar
Output	0-10V, 10-0V, 0-20 mA, 20-0 mA, 4-20 mA, 20-4 mA (Speed information can be provided optionally.)
Resolution	12 - 16 bit DAC output
Update time	0-600 mm, 0.5 ms 600-1.500 mm, 1 ms 1.501-3.000 mm, 2 ms 3.001-5.000 mm, 3 ms
Linearity	50-100 mm < %0.5 100-500 mm < %0.2 500-1.000 mm < %0.1 1.000-5.000 mm < %0.05
Repeatability	100 µm
Power supply	24 VDC (22-26 VDC)
Displacement speed	max. <5 m/s
Sampling rate	Up to 2 kHz (depending on stroke length)
Reverse polarity protection	Up to -30 VDC
Overvoltage protection	Up to +30 VDC
Max. consumption	<50 mA - 90 mA (depending on stroke length)
Max. output noise	<5 mVpp
Protection level	IP 65 - EN 60529
Vibration	EN 60068-2-6, 5-200 Hz 200 m/s² (20g), 2h 30min each axis (x,y,z)
Shock	EN 60068-2-2:2007 500 m/s² (50g) 11ms (x,y,z axis)
Mounting	M18 x 1.5 or 3/4" - 16 UNF O-ring or Flat
Case material	Profile : Anodized aluminium Body : Stainless steel Caps : Stainless steel
Operating temperature	-10°C ... +70°C
Storage temperature	-30°C ... +90°C

3.MECHANICAL DRAWING

CH2: Hydraulic type, 4 pin connector output (standard)

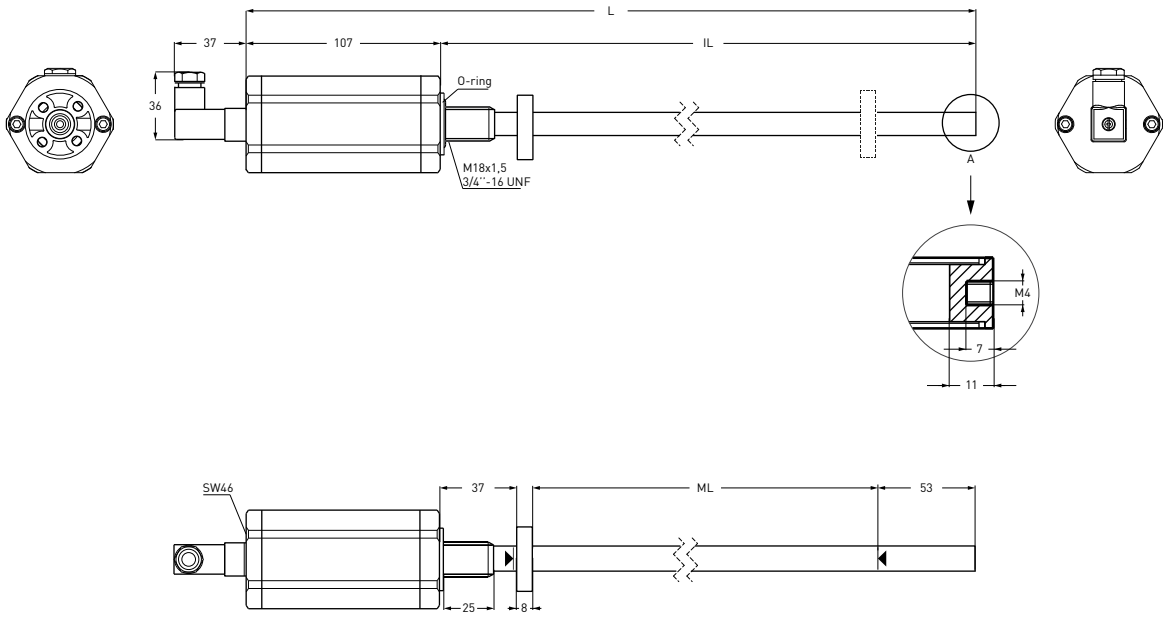

CN5A (M12) or CN5B (M16), 5 pin connector output (optional)

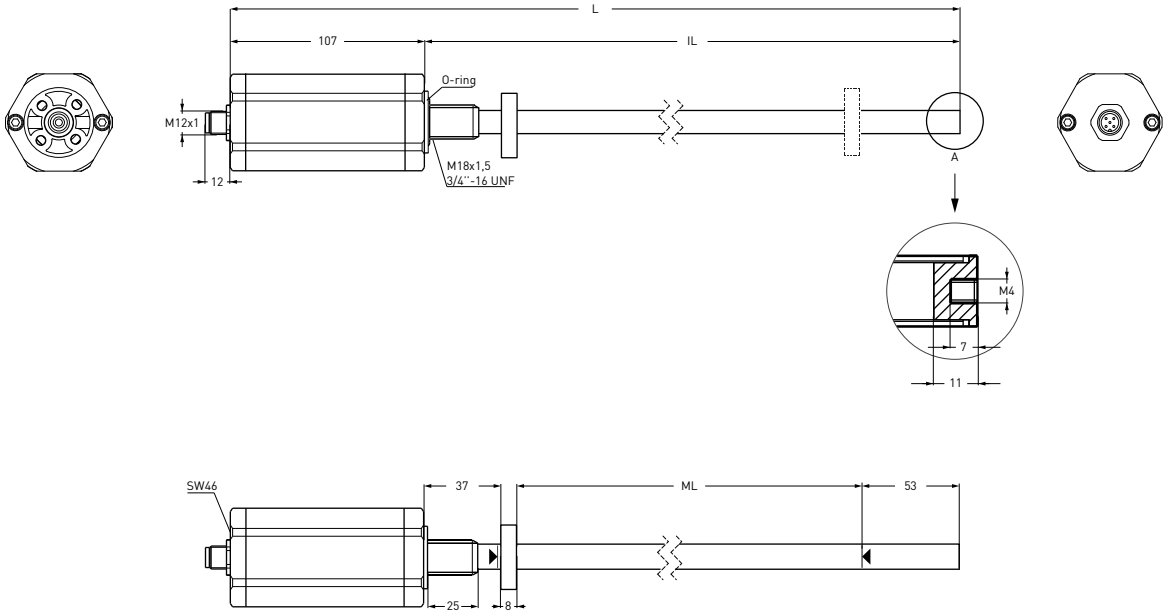

Cable output (optional)

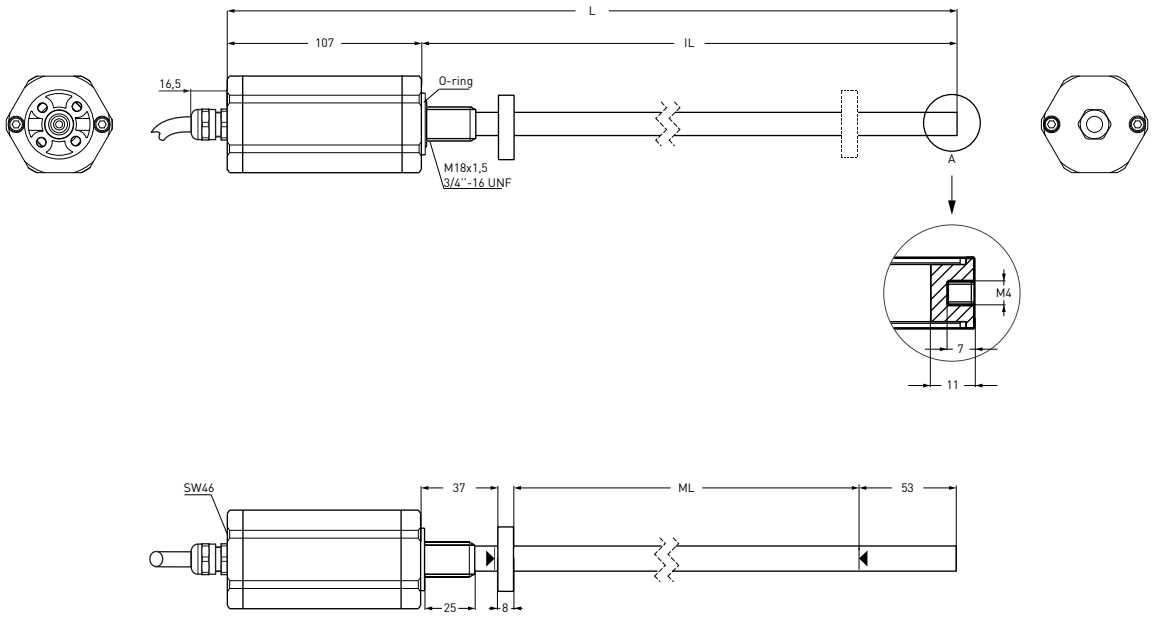

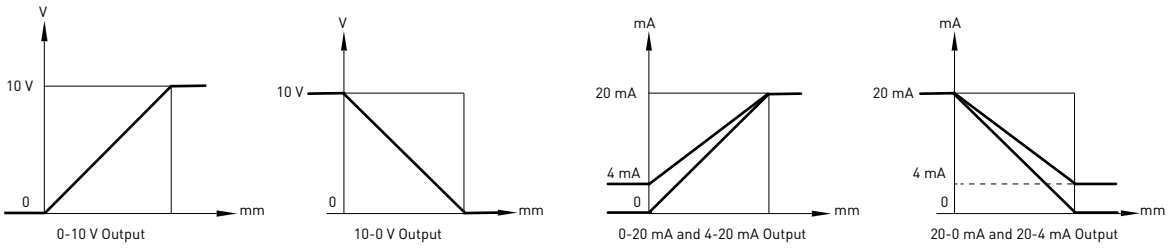

MST (mm)	50	100	150	200	250	300	350	400	450	500	550	600	650	700	750	800	850	900	1000	1100	1200	1300	1400	1500	1750	2000	2250	2500	3000	4000	5000
ML (Measuring Length)	50	100	150	200	250	300	350	400	450	500	550	600	650	700	750	800	850	900	1000	1100	1200	1300	1400	1500	1750	2000	2250	2500	3000	4000	5000
IL (Installation Length)	148	198	248	298	348	398	448	498	548	598	648	698	748	798	848	898	948	998	1098	1198	1298	1398	1498	1598	1848	2098	2348	2686	3186	4186	5186
L (Total Length)	255	305	355	405	455	505	555	605	655	705	755	805	855	905	955	1005	1055	1105	1205	1305	1405	1505	1605	1705	1955	2298	2548	2798	3318	4318	5318
Dead Zone Calculation	37/53																														

4.CONNECTORS AND CABLE

5 pin Connector Configuration
CN5 M12 (A) / M16 (B)
5 pin

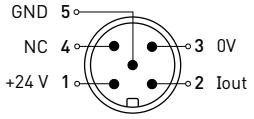

6 pin Connector Configuration
CN6 M12 (A) / M16 (B)
6 pin

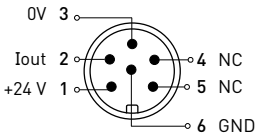

8 pin Connector Configuration
CN8 M12 (A) / M16 (B)
8 pin

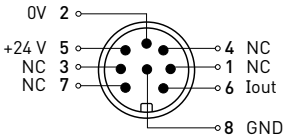

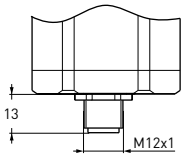

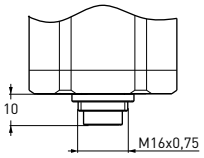

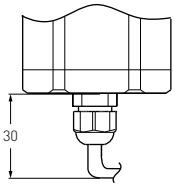

Voltage Output	
+V	Brown
0V	Blue
0V Sense	Black
Output1	White (0-10V)
Output2	Orange (10-0V)
Earth	Shield

Current Output	
+V	Brown
0V	Blue
0V Sense	Black
Output1	White (Iout1)
Output2	Orange (Iout2)
Earth	Shield

Cable Length	
1M	1 meter (standard) (Different cable length optional.)

5.HYDRAULIC TYPE CONNECTOR

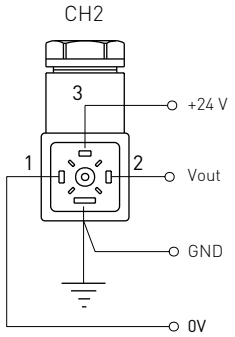

0-10V or 10-0V Output

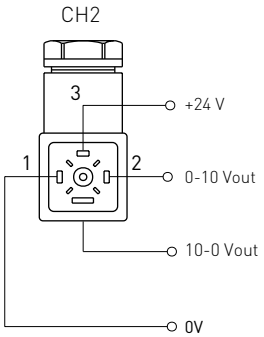

0-10V and 10-0V Output

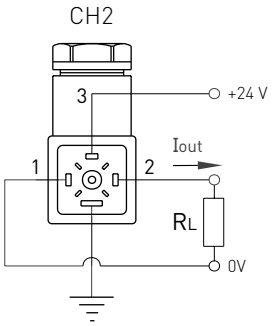

0-20mA or 4-20mA Output

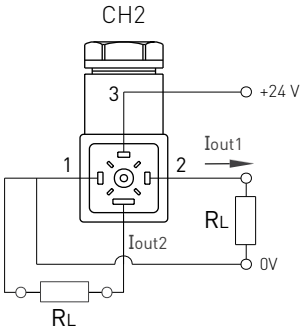

0-20mA and 4-20mA Output

6.CURSORS AND ACCESSORIES

Cursor	Spacer	Screw
R01T 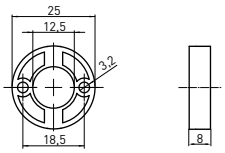	S01 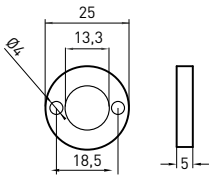	M3x20 Stainless steel 316L screw 2 units
R02T 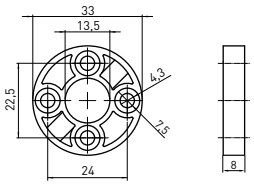	S02 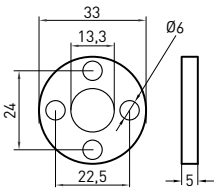	M3x20 Stainless steel 316L screw 2 units
R03T 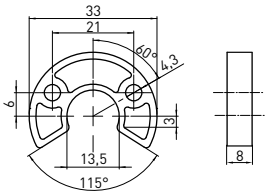	S02 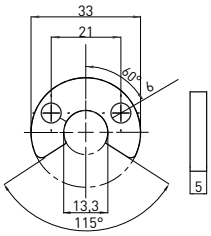	M4x20 Stainless steel 316L screw 2 units
R04T 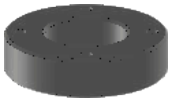 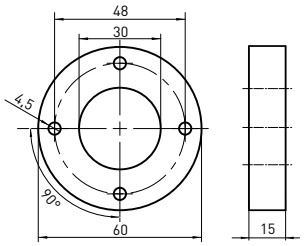	-	M4x20 Stainless steel 316L screw 4 units
R05T 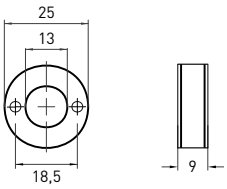	S01 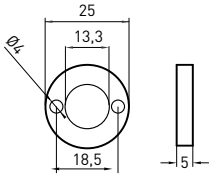	M3x20 Stainless steel 316L screw 2 units
R06T 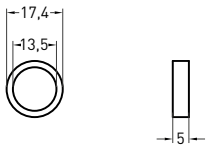	S03 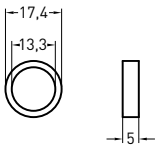	-
R10T 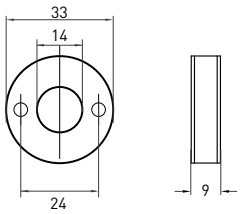	S02 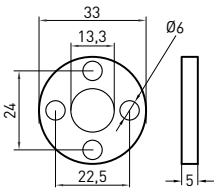	M4x20 Stainless steel 316L screw 2 units

7.SPACE REQUIREMENTS

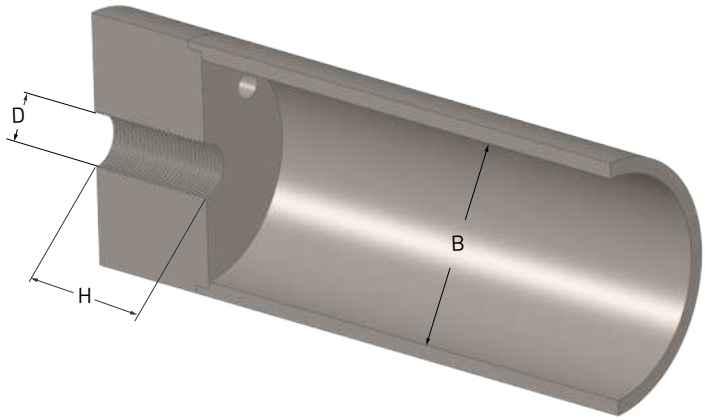

Type	B Ø Cylinder	D Ø min.	H Depth
MST	⩾ 70 mm	M18 x 1,5	28 mm

8.PISTON ROD BORE AND DEPTH

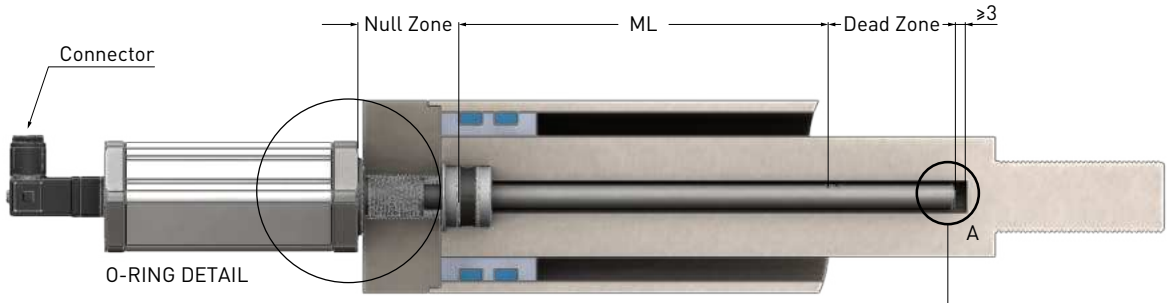

O-RING VERSION DETAIL (S)

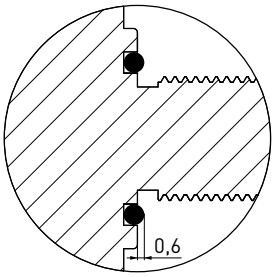

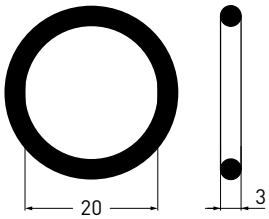

NBR O-ring

DETAIL A

ATTENTION MIN. 3 mm

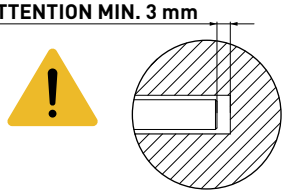

The sensor rod could be damaged when piston closing position, in case of piston bore is too short.

FLAT VERSION DETAIL (F)

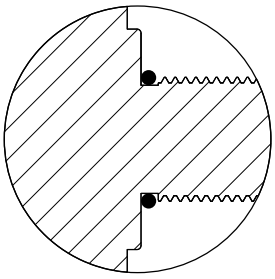

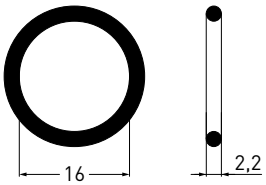

NBR O-ring

9.INSTALLING THE MAGNET

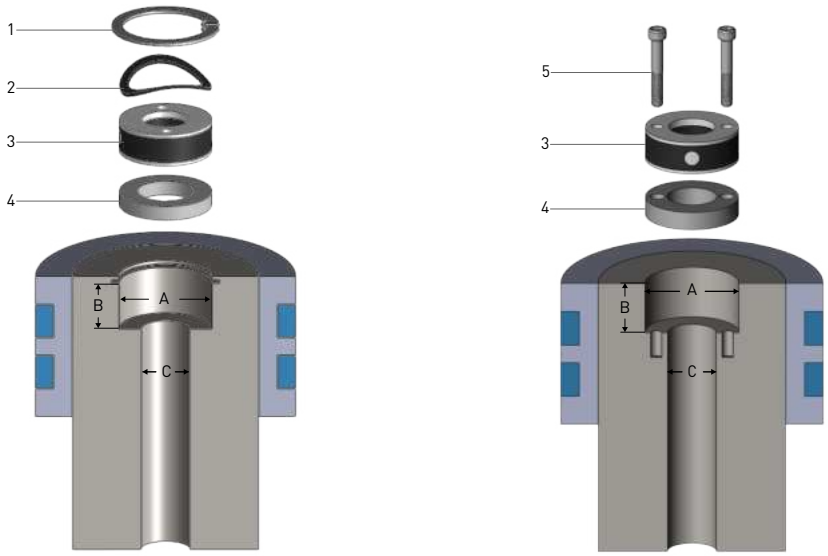

SPACER MUST BE USED!

	1	2	3	4	5	A	B	C
Non-magnetic spacer	Circlip	Corrugated washer	Cursor (R05T)	Non-magnetic spacer	-	Ø25 mm	≥14 mm	Ø10 mm rod for Ø13 mm
Screwing	-	-	Cursor (R05T)	Non-magnetic spacer	Screw	Ø25 mm	≥14 mm	Ø10 mm rod for Ø13 mm

10.ASSEMBLY DIRECTLY

10.1	10.2
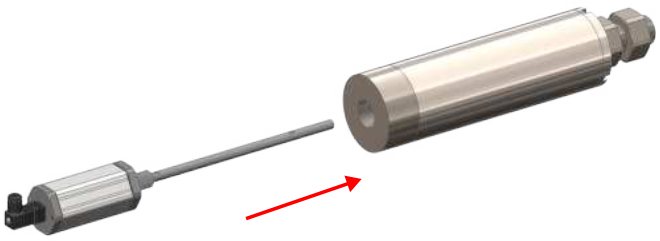	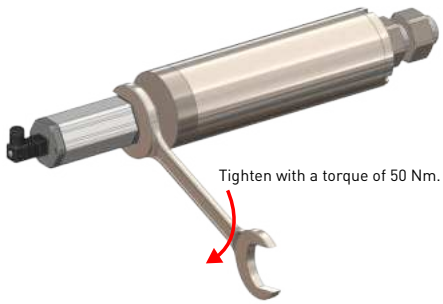

11.SLEEVE MECHANICAL DRAWING

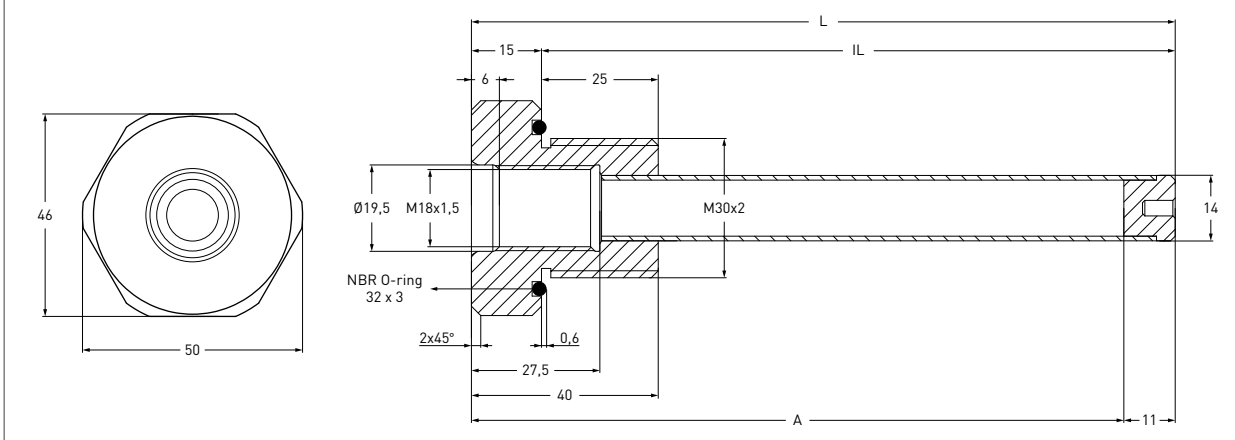

MST (mm)	50	100	150	200	250	300	350	400	450	500	550	600	650	700	750	800	850	900	1000	1100	1200	1300	1400	1500	1750	2000	2250	2500	3000	4000	5000
A	166	216	266	316	366	416	466	516	566	616	666	716	766	816	866	916	966	1016	1116	1216	1316	1416	1516	1616	1866	2116	2366	2616	3116	4116	5116
IL (Installation Length)	162	212	262	312	362	412	462	512	562	612	662	712	762	812	862	912	962	1012	1112	1212	1312	1412	1512	1612	1862	2112	2362	2612	3112	4112	5112
L (Total Length)	177	227	277	327	377	427	477	527	577	627	677	727	777	827	877	927	977	1027	1127	1227	1327	1427	1527	1627	1877	2127	2377	2627	3127	4127	5127

12.ASSEMBLY WITH SLEEVE

12.1

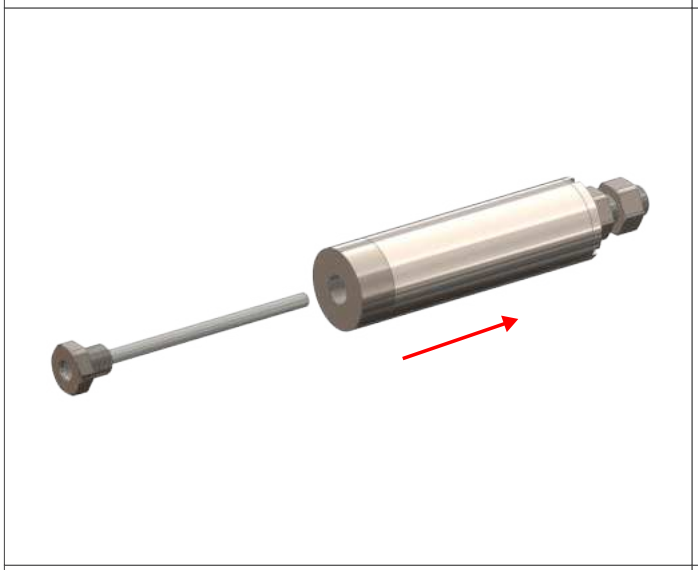

12.2

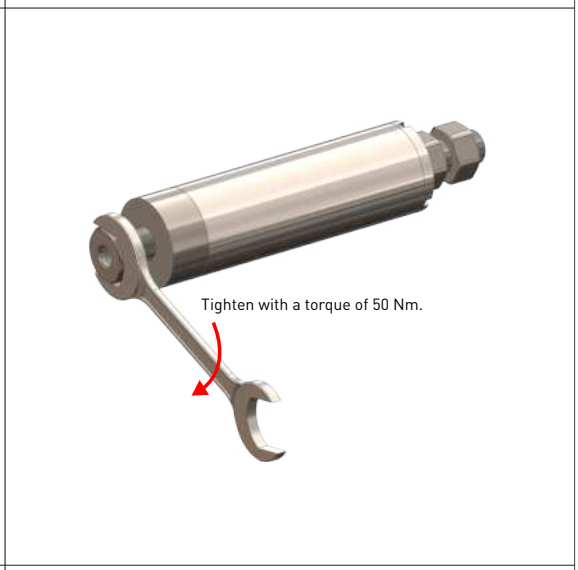

12.3

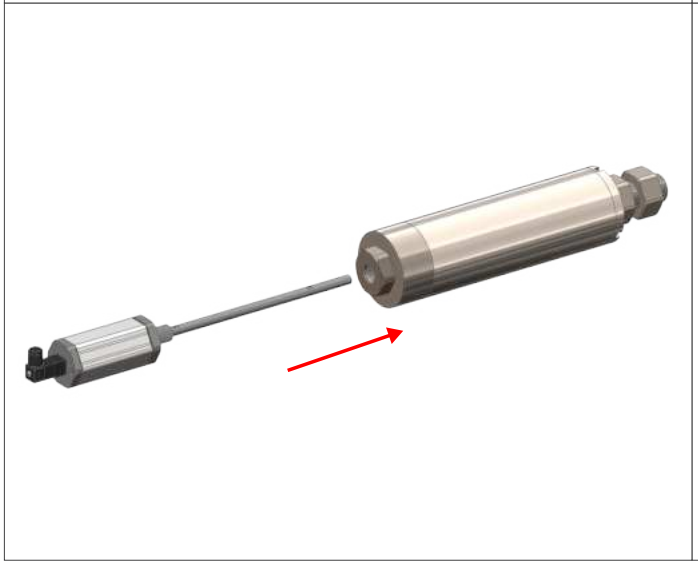

12.4

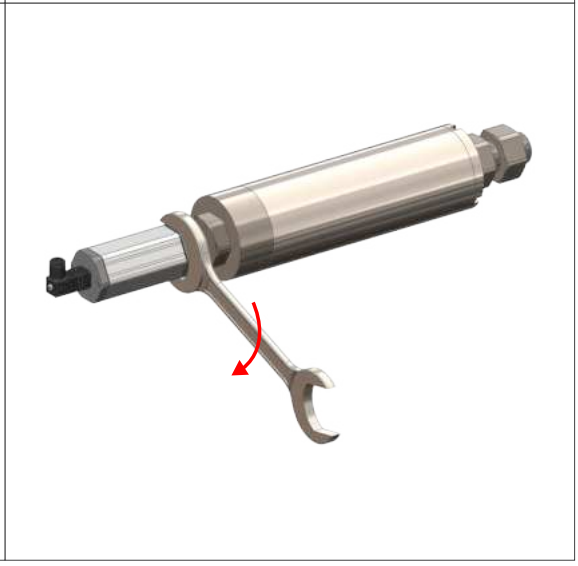

13.ORDERING PROCEDURE

1	**Model**		
	MST: Non-Contact Magnetostrictive Position Sensor In Cylinder Applications		
2	**Measuring range**		
	50 - 5.000 mm		
3	**Rod & Thread**		
	E10 : Ø10, M18x1,5		
	E12 : Ø12, M18x1,5		
	U10 : Ø10, 3/4¨-16 UNF		
	U12 : Ø12, 3/4¨-16 UNF		
4	**Sealing surface**		
	S : O - ring		
	F : Flat		
5	**Resolution**		
	A : 16 bit		
	B : 15 bit		
	C : 14 bit		
	D : 13 bit		
	E : 12 bit		
6	**Cursor and Spacer** (T- coded sensors are used with T-coded cursors)		
	1R01T: 25 mm (S01: 25 mm)	1R05T: 25 mm (S01: 25 mm)	S02: 33 mm
	1R02T: 33 mm (S02: 33 mm)	1R06T: 17.4 mm (S03: 17.4 mm)	S03: 17.4 mm
	1R03T: 33 mm (S02: 33 mm)	1R10T: 33 mm (S02: 33 mm)	1R01T: 1 cursor
	1R04T: 48 mm	S01: 25 mm	2R01T: 2 cursor
7	**Output**		
	V10: 0-10V	2V10: 0-10V/0-10V	V01: 10-0V
	2V01: 10-0V/10-0V	V11: 0-10V/10-0V	V50: 0-5V
	V05: 5-0V	2V05: 5-0V/5-0V	V51: 0-5V/5-0V
	I40: 4-20mA	2I40: 4-20mA/4-20mA	I04: 20-4mA
	2I04: 20-4mA/20-4mA	I41: 4-20mA/20-4mA	I20: 0-20mA
	2I20: 0-20mA/0-20mA	I02: 20-0mA	2I02: 20-0mA/20-0mA
	I21: 0-20mA/20-0mA	I02: 20-0mA	
8	**Output2 (optional)**		
	Sxxx → S: Hız, xxx: max. speed (mm/s)		
9	**Connector / Cable**		
	CH2 : 4 pin, hydraulic type connector (standard)		
	CN5A : 5 pin, M12 connector		
	CN5B : 5 pin, M16 connector		
	CN6A : 6 pin, M12 connector		
	CN6B : 6 pin, M16 connector		
	CN8A : 8 pin, M12 connector		
	CN8B : 8 pin, M16 connector		
	1M : 1 meter cable (standard), Different cable lengths acailable (optional)		
10	**Dead zone**		
	≤ 2.000 mm : 30/53, 37/53, 47/53, 57/53, 67/53, 77/53, 30/60, 51/63		
	> 2.000 - 3.000 mm : 130/53 mm		
	> 3.000 - 5.000 mm : 150/53 mm		

For example:

MST	750	E10	S	B	1R05T	I40	Sxxx	CN5A	30/53
1	**2**	**3**	**4**	**5**	**6**	**7**	**8**	**9**	**10**

TÜRKİYE
Headquarter, R&D, Production

OPKON Optik Elektronik Kontrol Sanayi ve Ticaret A.Ş.
Terazidere Mah. 29 Ekim Cad. No:34 Bayrampaşa / İstanbul / TÜRKİYE
Phone : +90 (212) 501 48 63
Fax : +90 (212) 501 48 83
Web : www.opkon.com.tr
E-mail : otomasyon@opkon.com.tr

GERMANY
Subsidiary

SENSORMARKET GmbH
Graeffstrasse. 5, 50823 Köln / GERMANY
Phone : +49 22159495400
Fax : +49 22159495402
Web : www.sensormarker.eu
E-mail : sales@sensormarket.eu

CHINA
Subsidiary

DANZI Sense Technology
(Shanghai) Co., LTD. Room 123 - B, F/1, No. 1000 Ziyue Road, Minhang District, 200240 Shanghai / CHINA
Hotline : 400 8050 889
Phone : 021 - 64091719
Fax : 021 - 64091713
Web : www.opkonchina.com
E-mail : marketing@opkonchina.com

opkon.com.tr

Please note: The specifications and information in this datasheet may not cover all special demands arising from specific applications. Therefore, they do not constitute a comprehensive description of the product properties. OPKON accepts no responsibility for damages resulting from the improper application of our products. The user is responsible for ensuring that the products used are suitable for their own application.

DS.MST.ENG.17.07.24.AN